Alle Rechte vorbehalten/ *All rights reserved*

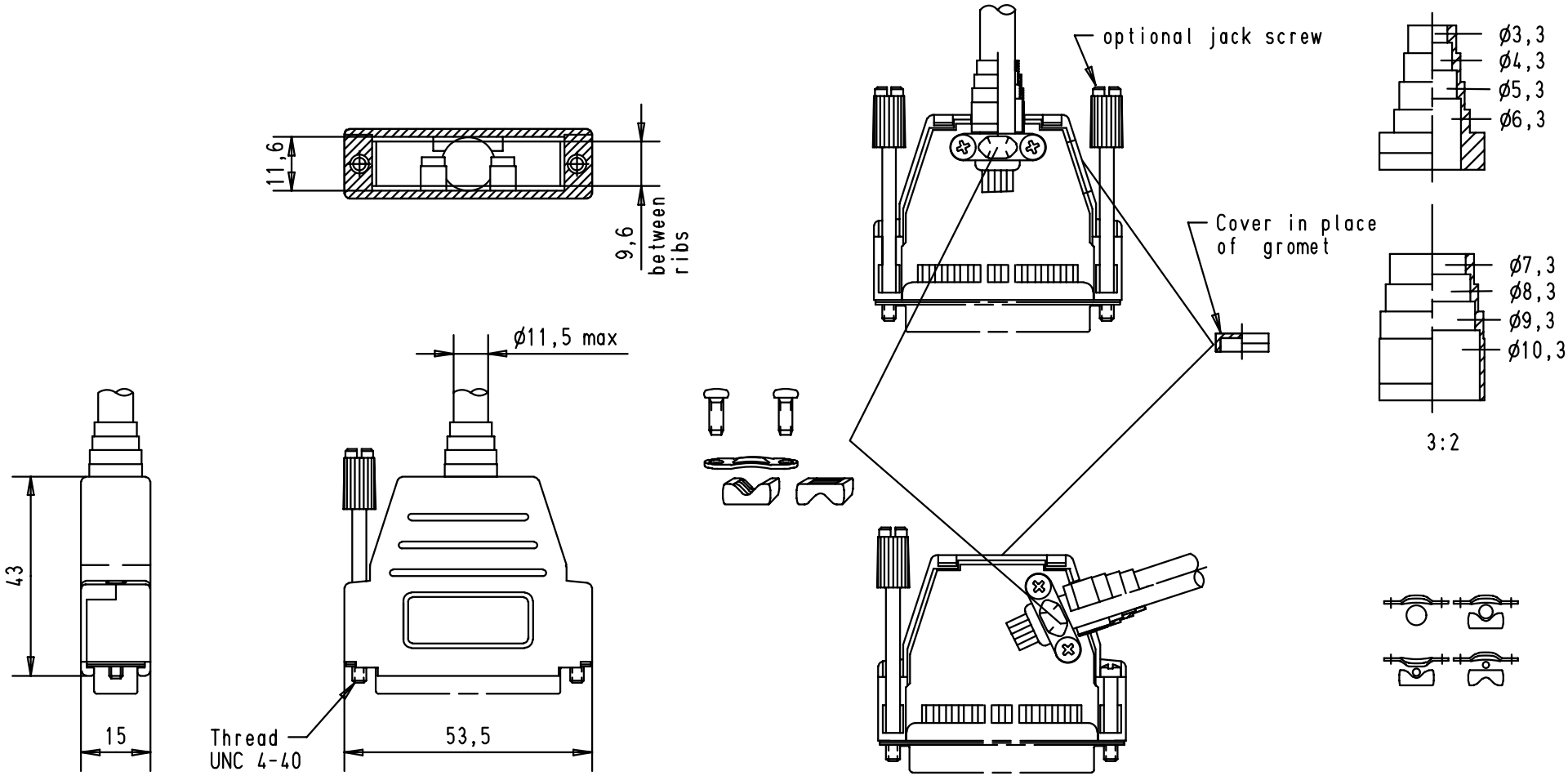

09 67 025 0435	4-40 UNC		29760	28-MAR-02	CV
Part number	Screw thread	Performance level	Mod.	Dat.	Name

	Dat.	Name
Detail.	28-MAR-02	CV
Insp.		
Stand.		

All Dim. in mm
Orig. Size DIN A 4

D-Sub, Top and side entry hood
with knurled screws
25 poles
Thermoplastic metallized

Maßstab/ *Scale*
3:4
3:2

HARTING EURL
F-95972 Paris

TB 09670250435

Sub.

Blatt/ *Page*
1